Input data

System of measurement		Metric
Input type		Gear motor
Input speed	[rpm]	1400
Output speed	[rpm]	14.58
Ratio (i=)		96
Frequency	[Hz]	50
Input options		IEC
Requested input power	[kW]	0.37
Service factor		1.4
Rated Power P1	[kW]	0.51

Output data

Gear unit		**M TA 71/60 B3 10 96 71 B14 AC 25 MT 0.37 kW 71 B4 B14 X3**
Type		TA - Worm speed reducers
Input type		M
Size		71/60
Ratio (i=)		96
Gearbox ratio		15.00
Pre-stage ratio		6.40
Input flange		B14
Input speed	[rpm]	1400
Output speed	[rpm]	14.58
Rated output torque	[Nm]	169.61
Service Factor		1.4
Efficiency		0.7
Inertia moment	[kgm^2]	0.000047

Gear unit configuration

Output shaft		Hollow output shaft
Fixing		Universal
Version		B3
Attachment position		10

Output radial and axial loads

Ball bearings output radial load	[N]	5550
Taper bearings output radial load	[N]	6600
Ball bearings output axial load	[N]	1110
Taper bearings output axial load	[N]	1320

Accessories

Hollow output shaft		AC 25

Electric motor

Size		71 B4
Poles		4
Power	[kW]	0.37

Electric motor configuration

Motor flange		B14
Terminal box position		X3

VARVEL SpA | Via 2 agosto 1980 | Loc. Crespellano, 40053 Valsamoggia (BO) Italy | T +039 051 6721811 | F +039 051 6721825 | varvel@varvel.com

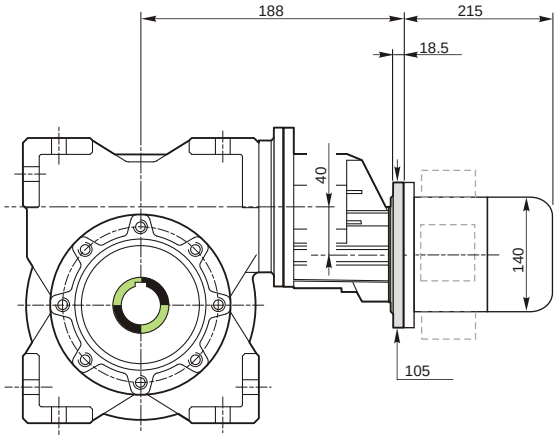

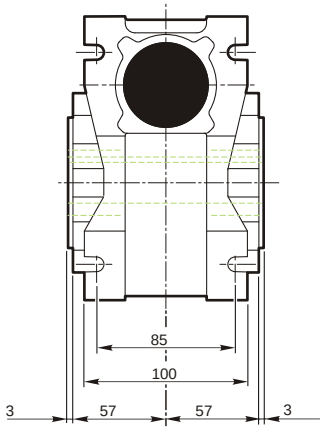

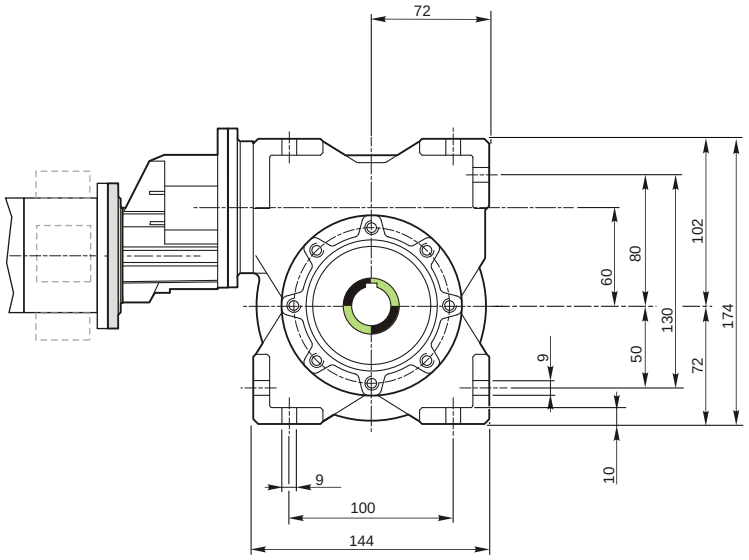

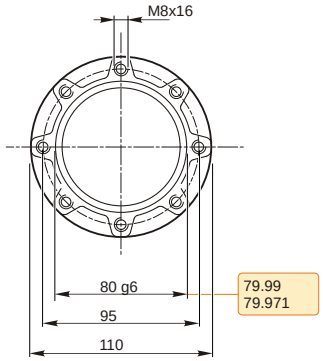

79.99
79.971

25.021
25.000

Hollow output shaft

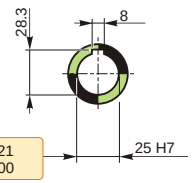

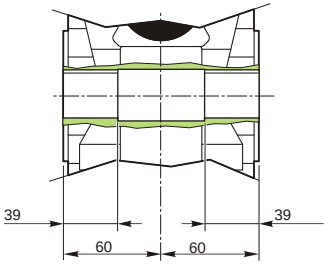

Attachment position

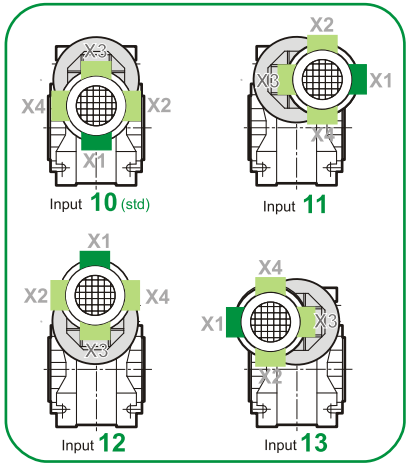

M TA 71/60 B3 10 96 71 B14 AC 25 MT 0.37 kW 71 B4 B14 X3

VARVEL SpA | Via 2 agosto 1980 | Loc. Crespellano, 40053 Valsamoggia (BO) Italy | T +039 051 6721811 | F +039 051 6721825 | varvel@varvel.com

Mounting positions

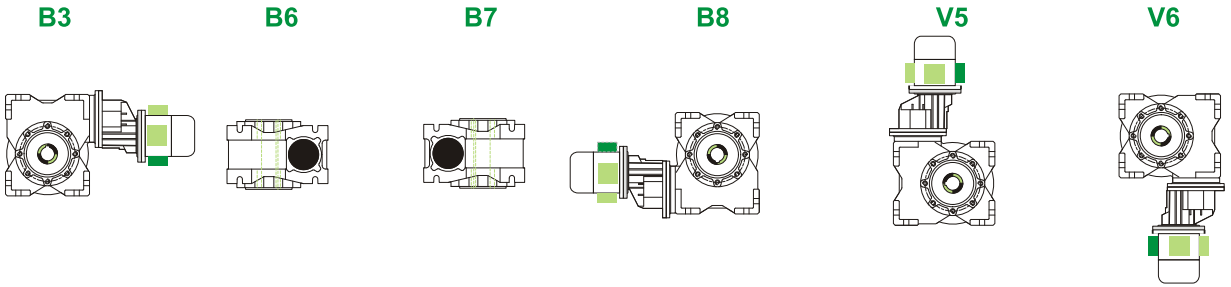

Terminal box position

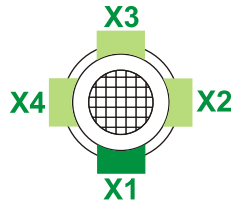

0.05	1
0.23	2

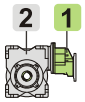

Oil quantity [litres]

Lubricant type: Long life synthetic oil ISO VG320

Direction of rotation

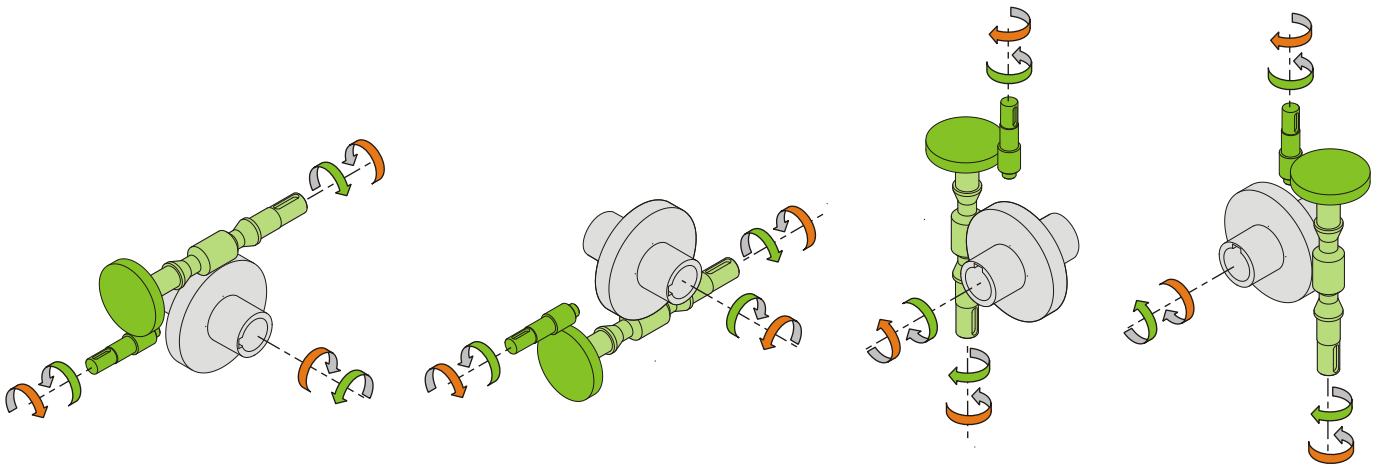

Weight

Gear unit [kg]	9.3
Electric motor [kg]	6.2

Gearing data

Axial module	3.1
Number of starts	2
Lead angle	12° 55'
Pressure angle	20°

Backdriving

Static back-driving
Quick back-driving
Dynamic back-driving

M TA 71/60 B3 10 96 71 B14 AC 25 MT 0.37 kW 71 B4 B14 X3

VARVEL SpA | Via 2 agosto 1980 | Loc. Crespellano, 40053 Valsamoggia (BO) Italy | T +039 051 6721811 | F +039 051 6721825 | varvel@varvel.com