Input data

System of measurement		Metric	
Input type		Gear motor	
Input speed	[rpm]	1400	
Output speed	[rpm]	4.51	
Ratio (i=)		310.4	
Frequency	[Hz]	50	
Input options		IEC	
Requested input power	[kW]	1.1	
Service factor		0.7	**Warning! The torque generated by the selected motor is above the gearbox rated output torque; please refer to the gearbox rated output torque.**
Rated Power P1	[kW]	0.78	

Output data

Gear unit		**M TA 100/110 B3 10 310.4 90 B14 AC 42 MT 1.1 kW 90 S4 B14 X3**
Type		TA - Worm speed reducers
Input type		M
Size		100/110
Ratio (i=)		310.4
Gearbox ratio		80.00
Pre-stage ratio		3.88
Input flange		B14
Input speed	[rpm]	1400
Output speed	[rpm]	4.51
Rated output torque	[Nm]	740
Service Factor		0.7
Efficiency		0.45

Gear unit configuration

Output shaft		Hollow output shaft
Fixing		Universal
Version		B3
Attachment position		10

Output radial and axial loads

Ball bearings output radial load	[N]	9800
Taper bearings output radial load	[N]	11100
Ball bearings output axial load	[N]	1960
Taper bearings output axial load	[N]	2220

Accessories

Hollow output shaft		AC 42

Electric motor

Size		90 S4
Poles		4
Power	[kW]	1.1

Electric motor configuration

Motor flange		B14
Terminal box position		X3

VARVEL SpA | Via 2 agosto 1980 | Loc. Crespellano, 40053 Valsamoggia (BO) Italy | T +039 051 6721811 | F +039 051 6721825 | varvel@varvel.com

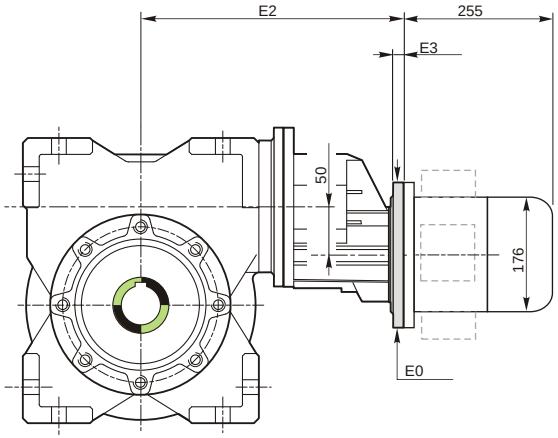

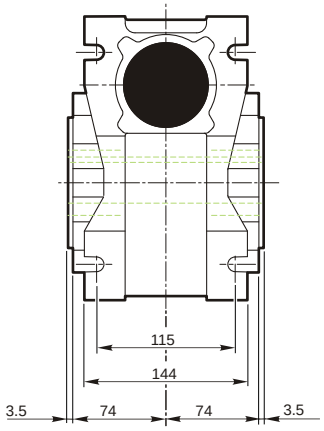

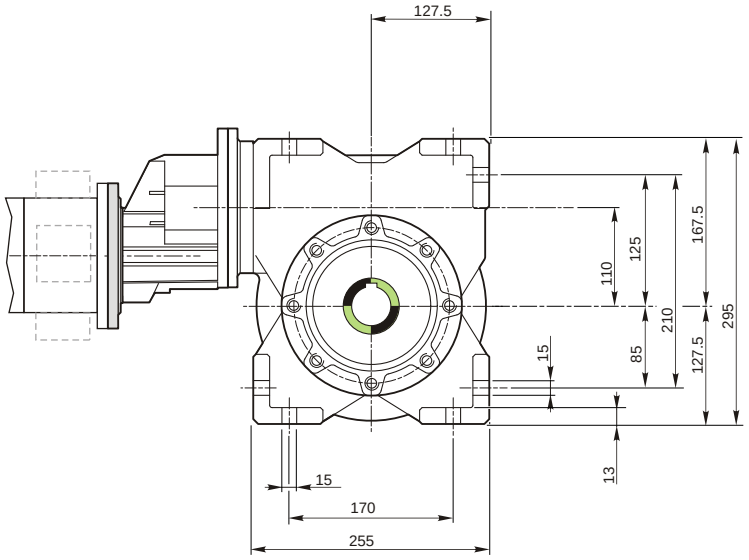

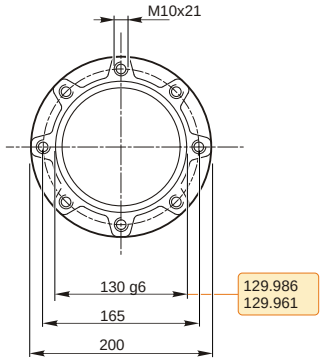

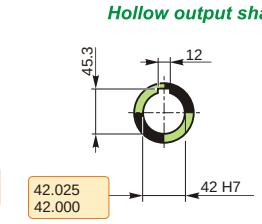

129.986
129.961

42.025
42.000

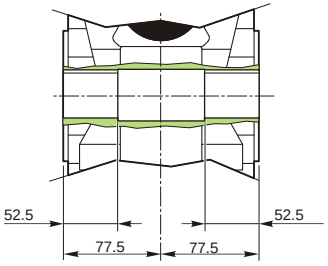

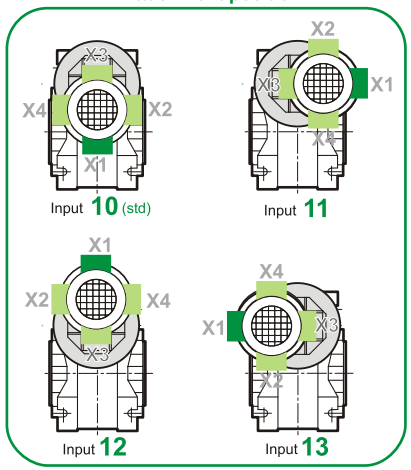

M TA 100/110 B3 10 310.4 90 B14 AC 42 MT 1.1 kW 90 S4 B14 X3

VARVEL SpA | Via 2 agosto 1980 | Loc. Crespellano, 40053 Valsamoggia (BO) Italy | T +039 051 6721811 | F +039 051 6721825 | varvel@varvel.com

Mounting positions

B3 B6 B7 B8 V5 V6

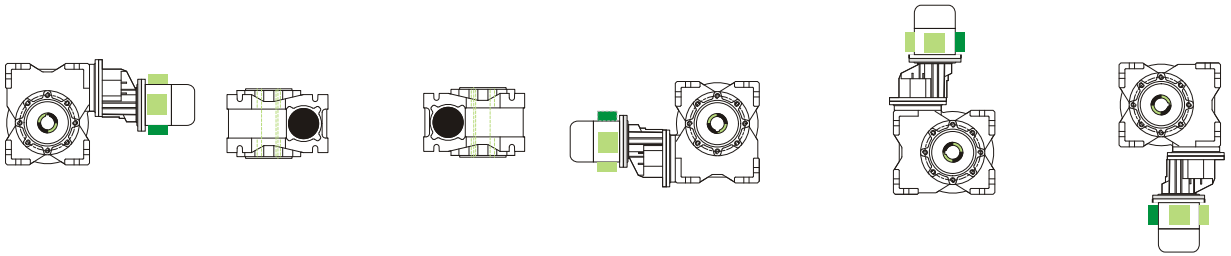

Terminal box position

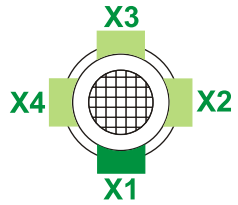

0.2	1
1.5	2

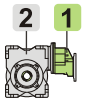

Oil quantity [litres]

Lubricant type: Long life synthetic oil ISO VG320

Direction of rotation

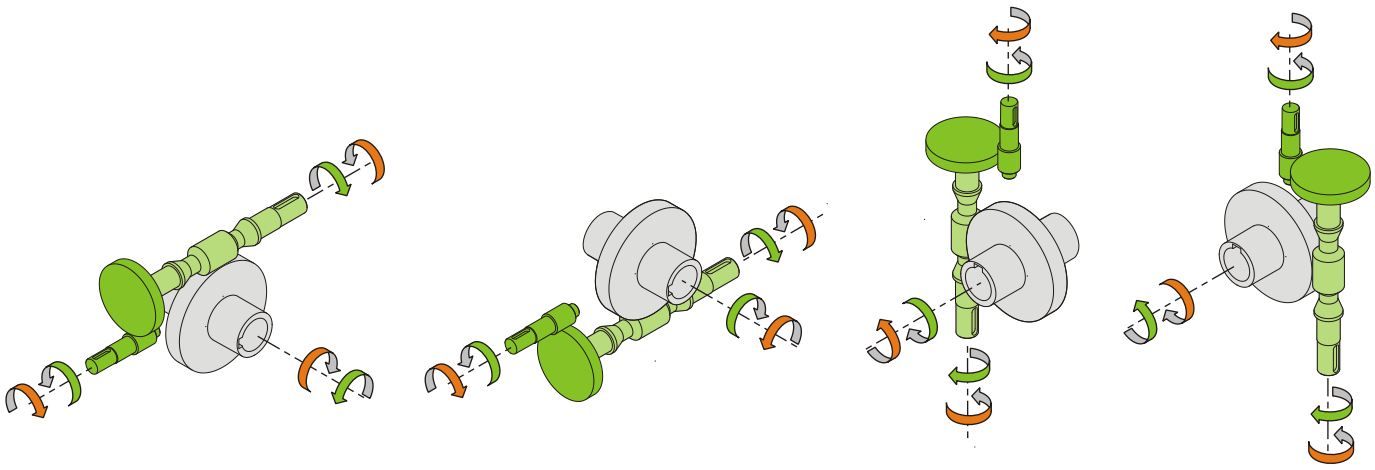

Weight

Gear unit [kg]	46
Electric motor [kg]	12

Gearing data

Axial module	2.3
Number of starts	1
Lead angle	3° 39'
Pressure angle	20°

Backdriving

Static self-locking
Slow back-driving in case of vibrations
Low dynamic back-driving

M TA 100/110 B3 10 310.4 90 B14 AC 42 MT 1.1 kW 90 S4 B14 X3

VARVEL SpA | Via 2 agosto 1980 | Loc. Crespellano, 40053 Valsamoggia (BO) Italy | T +039 051 6721811 | F +039 051 6721825 | varvel@varvel.com