Input data

System of measurement		Metric
Input type		Gear motor
Input speed	[rpm]	1400
Output speed	[rpm]	8.03
Ratio (i=)		174.44
Frequency	[Hz]	50
Input options		IEC
Requested input power	[kW]	1.5
Service factor		1
Rated Power P1	[kW]	1.56

Output data

Gear unit		**M TA 100/110 B3 10 174.44 90 B14 AC 42 MT 1.5 kW 90 L4 B14 X3**
Type		TA - Worm speed reducers
Input type		M
Size		100/110
Ratio (i=)		174.44
Gearbox ratio		28.00
Pre-stage ratio		6.23
Input flange		B14
Input speed	[rpm]	1400
Output speed	[rpm]	8.03
Rated output torque	[Nm]	1124.48
Service Factor		1
Efficiency		0.63

Gear unit configuration

Output shaft		Hollow output shaft
Fixing		Universal
Version		B3
Attachment position		10

Output radial and axial loads

Ball bearings output radial load	[N]	9800
Taper bearings output radial load	[N]	11100
Ball bearings output axial load	[N]	1960
Taper bearings output axial load	[N]	2220

Accessories

Hollow output shaft		AC 42

Electric motor

Size		90 L4
Poles		4
Power	[kW]	1.5

Electric motor configuration

Motor flange		B14
Terminal box position		X3

VARVEL SpA | Via 2 agosto 1980 | Loc. Crespellano, 40053 Valsamoggia (BO) Italy | T +039 051 6721811 | F +039 051 6721825 | varvel@varvel.com

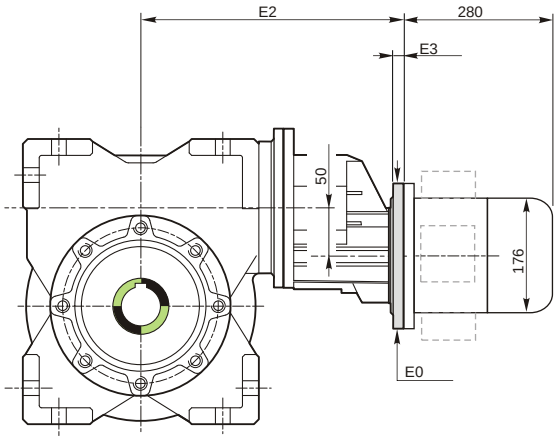

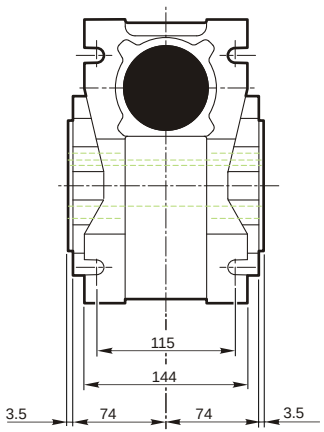

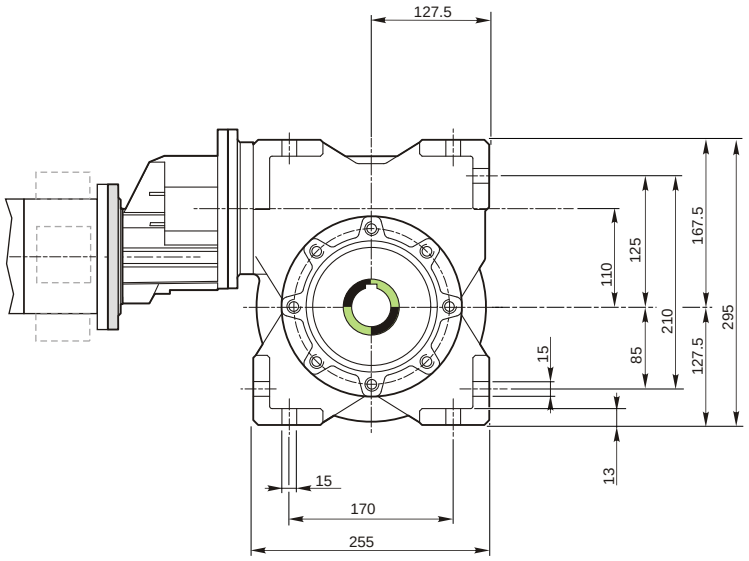

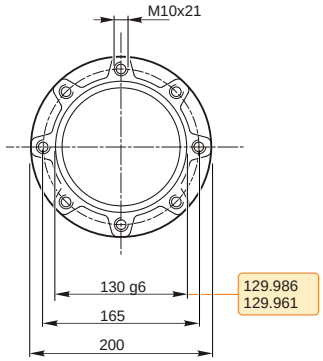

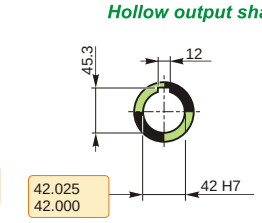

Hollow output shaft

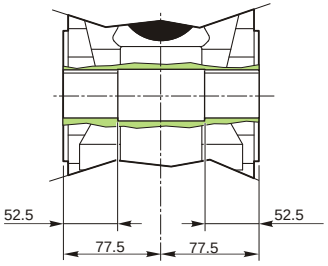

Attachment position

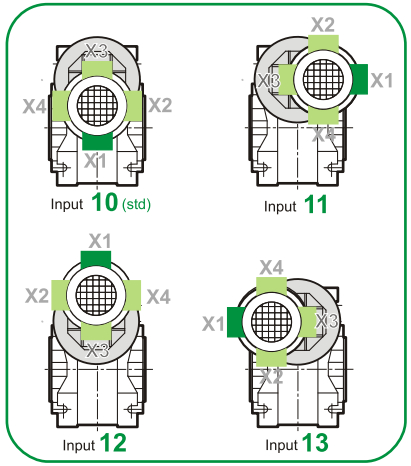

M TA 100/110 B3 10 174.44 90 B14 AC 42 MT 1.5 kW 90 L4 B14 X3

VARVEL SpA | Via 2 agosto 1980 | Loc. Crespellano, 40053 Valsamoggia (BO) Italy | T +039 051 6721811 | F +039 051 6721825 | varvel@varvel.com

Mounting positions

B3 B6 B7 B8 V5 V6

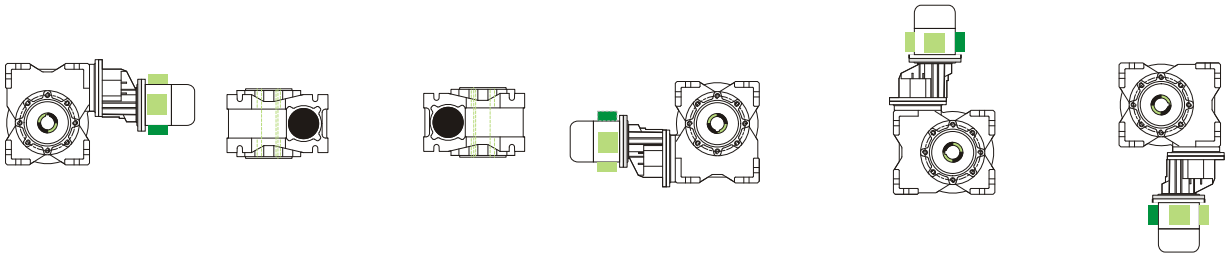

Terminal box position

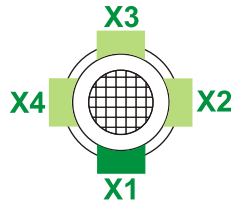

0.2	1
1.5	2

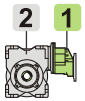

Oil quantity [litres]

Lubricant type: Long life synthetic oil ISO VG320

Direction of rotation

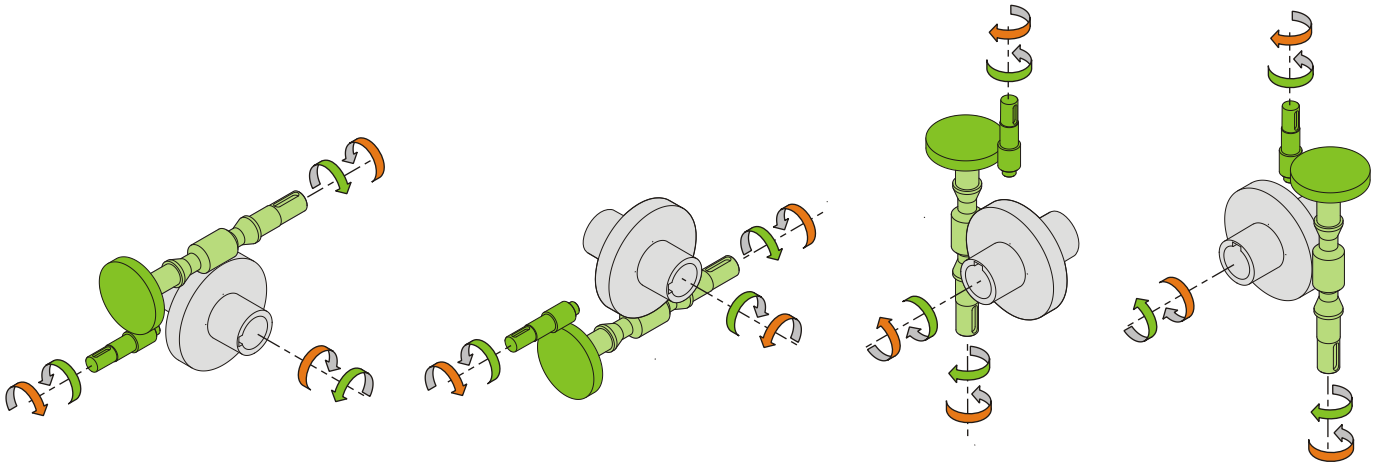

Weight

Gear unit [kg]	46
Electric motor [kg]	13.5

Gearing data

Axial module	6.1
Number of starts	1
Lead angle	7° 04’
Pressure angle	20°

Backdriving

Static self-locking
Slow back-driving in case of vibrations
Low dynamic back-driving

M TA 100/110 B3 10 174.44 90 B14 AC 42 MT 1.5 kW 90 L4 B14 X3

VARVEL SpA | Via 2 agosto 1980 | Loc. Crespellano, 40053 Valsamoggia (BO) Italy | T +039 051 6721811 | F +039 051 6721825 | varvel@varvel.com